BRIGHTWAY LED Lighting

LED UFO HIGH BAY LIGHT – HG Series 240W

APPLICATION - This LED UFO high bay light is ETL/Intertek and DLC listed and is ideal for new construction or retrofitting existing high bay fixtures. Well suited for factories, warehouses, airports, schools, hospitals, shopping malls, convention centers, casinos, retail stores, restaurants, grocery stores and new construction.

CONSTRUCTION – These long lasting UFO LED high bay fixtures feature a patented anti-glare design to minimize glare as well as optimize lighting performance. Choose from multiple light distribution options: 60°, 80° and 120°. These fixtures are ideal for any facility with a mounting height of 15 to 40 feet.

IP RATING – IP67 Driver, IP68 Optics

FEATURES

- Patented anti-glare design
- Automatic dimming with 1-10V dimmable drivers or ballasts
- Built in daylight sensor
- Highly efficient aluminum heat sink fins
- Choose from frosted PC cover or transparent PC covers
- Optional of controls for maximum energy savings
- Smart control ready, works with Dali and ZigBee.
- Surge resistance – 6000V, surge current 65A

ELECTRICAL - ETL Certified, energy-efficient driver reduces energy use and operating cost. Standard operating voltage is 100-277VAC (480VAC Available). 0-10V dimming standard. Expected operating hour life of this fixture will be more than 50,000 hours.

MOUNTING – Hook ring, E40 thread base, hook, tube and adjustable bracket.

Brightway LED UFO High Bay Series

PART#	DESCRIPTION	VOLTAGE	COLOR TEMP	CASE PACK
HG-HL-240W-R	UFO HIGH BAY LIGHT 240 WATT	100-277 VAC	5000K	2

LED UFO HIGH BAY LIGHT – HG Series 240W

Technical Drawings

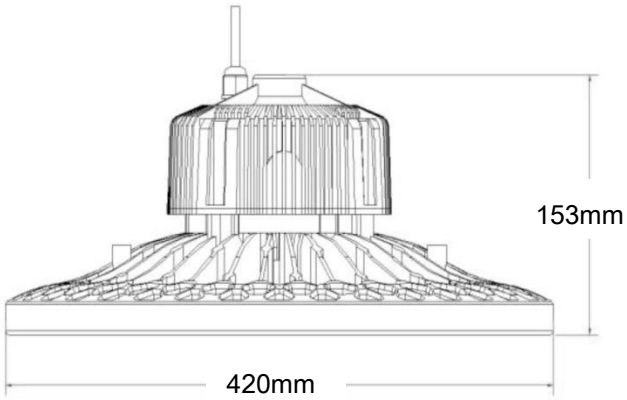

Specifications

MODEL# HG-HL-240W-R			SIZE & WEIGHT
CONSTRUCTION	HOUSING	Aluminum	LENGTH 420 MM
	LENS	Fire Proof PC	
	LED	SMD	
	BEAM ANGLE	60°,80°,130°	
	CABLE	3 core,18AWG	
ELECTRICAL	POWER	240 Watt	HEIGHT 153 MM
	VOLTAGE	100-277 VAC	
	DIMMABLE	1-10V DC & PWM Signal & Resistance	
	CRI	Ra>70/80	
	POWER FACTOR	>0.9	WEIGHT 7.6 KG
	WORKING TEMP	-20^0 C ~ 40^0 C	
PERFORMANCE	LUMEN OUTPUT	31,200 LM, >130 Lm/W	
	CCT COLOR (K)	5000K	
	BRIGHTNESS DECAY	<5%/6000 Hrs.	
	REPLACES	1,000W MH Equivalent	
	APPLICATION	Warehouse, industrial, retail, gymnasiums	

Mounting Options

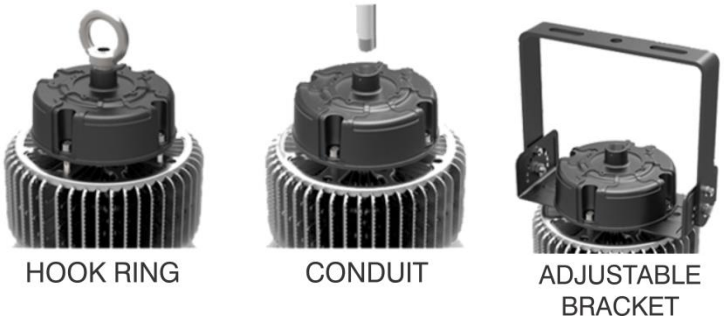

Reflector Option

Optional Controls